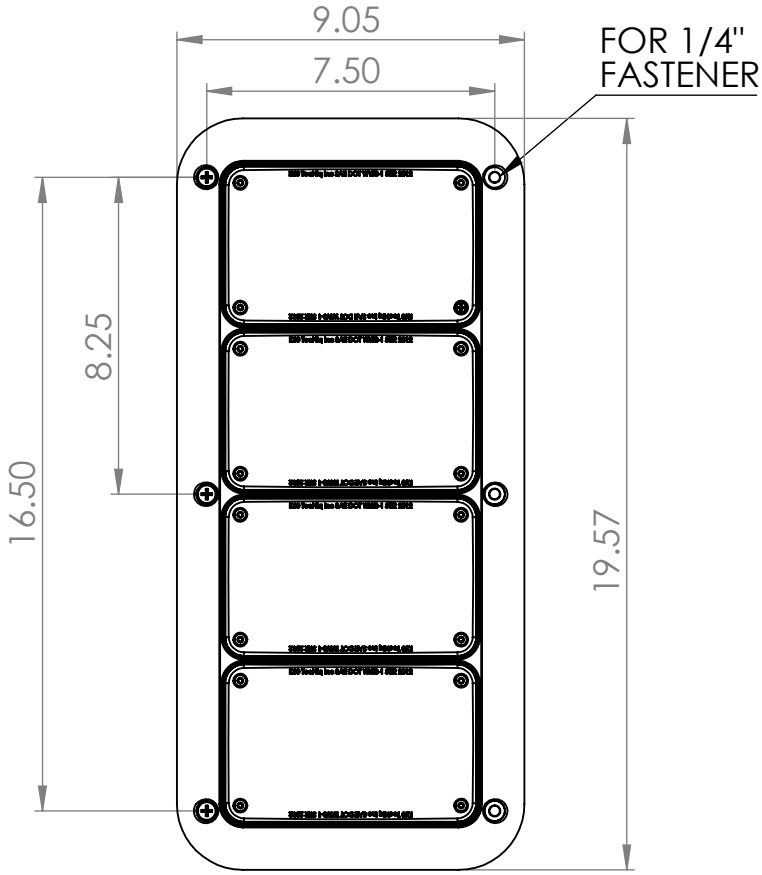

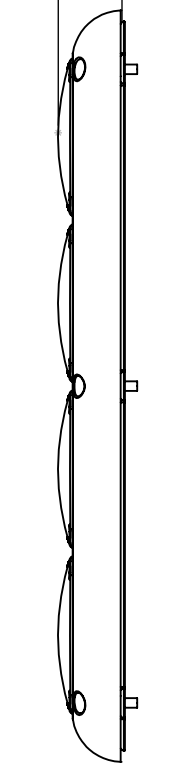

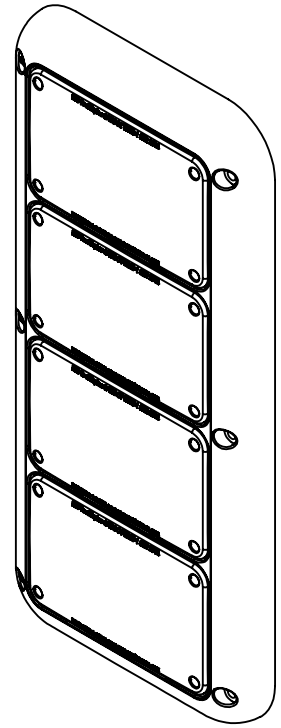

TecNiq
Changing the Shape of Light

K60-0C40-1