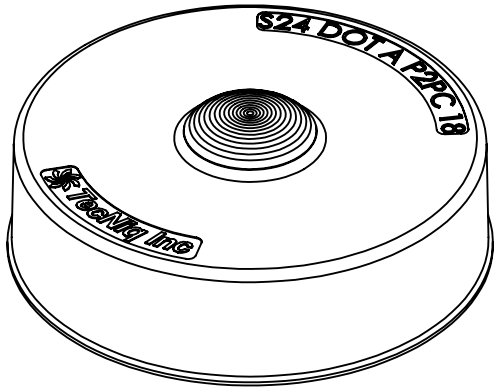

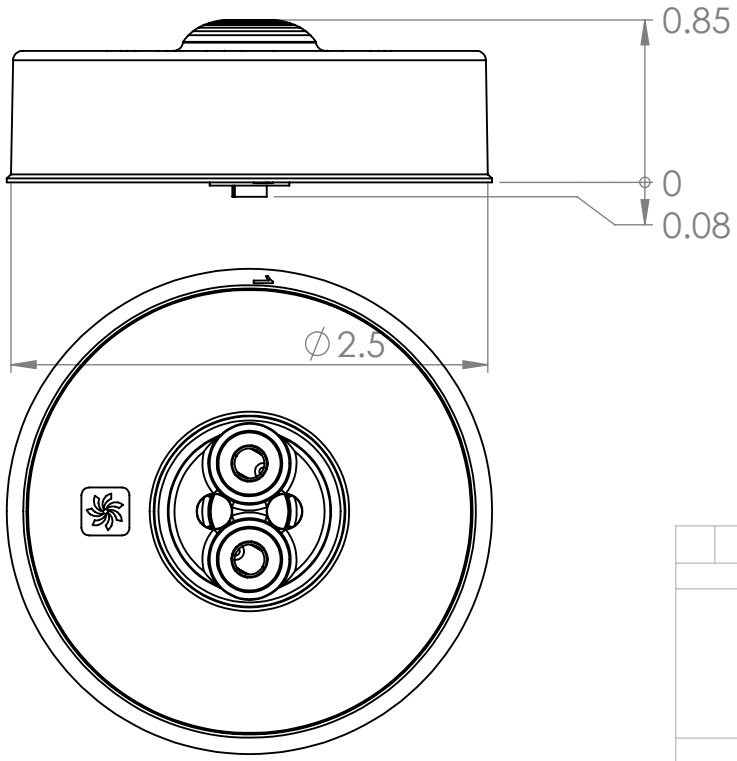

TecNiq Inc
Changing the Shape of Light

S24